SANTA CLARA UNIVERSITY

Electrical and Computer Engineering

ECEN 603 *Logic Design Using HDL*

Homework 3

For each of the following problems, submit the Verilog code for both the design modules and the test bench. Additionally, submit the simulation output.

1. [5 points] The Galois LFSR is a type of circuit for PN sequence generation. It follows a feedback polynomial similar to the Fibonacci LFSR but in a reverse order.

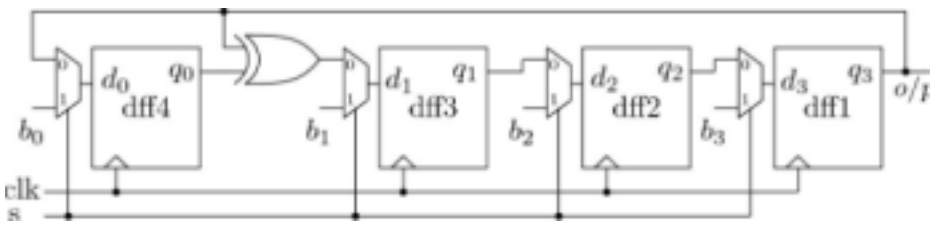

Write the following code for this circuit:

a. Behavioral

```
module galois_lfsr_behavioral(
        input clk, rst,
        input [3:0] sel, b,
        output reg [3:0] q,
        output out
);
        assign out = q[3];
        always @(posedge clk) begin
                if (rst) q <= 4'b1000;
                else begin
                        q[0] <= sel[0] ? b[0] : q[3];
                        q[1] <= sel[1] ? b[1] : q[0] ^ q[3];
                        q[2] <= sel[2] ? b[2] : q[1];
                        q[3] <= sel[3] ? b[3] : q[2];
                end
        end
endmodule
```

b. Structural and/or dataflow

```
module dff #(parameter INIT = 0)(
	input clk, rst, d,
	output reg q
);
	always @(posedge clk) begin
		if (rst) q <= INIT;
		else q <= d;
	end
endmodule

module galois_lfsr_structural(
	input clk, rst,
	input [3:0] sel, b,
	output [3:0] q,
	output out
);
	wire [3:0] d;
	assign out = q[3];

	assign d[0] = sel[0] ? b[0] : q[3];
	assign d[1] = sel[1] ? b[1] : q[0] ^ q[3];
	assign d[2] = sel[2] ? b[2] : q[1];
	assign d[3] = sel[3] ? b[3] : q[2];

	dff #(0) dff4(.clk(clk), .rst(rst), .d(d[0]), .q(q[0]));
	dff #(0) dff3(.clk(clk), .rst(rst), .d(d[1]), .q(q[1]));
	dff #(0) dff2(.clk(clk), .rst(rst), .d(d[2]), .q(q[2]));
	dff #(1) dff1(.clk(clk), .rst(rst), .d(d[3]), .q(q[3]));
endmodule
```

c. Test Results and tb Code

```
module tb();
	reg clk, rst;
	reg [3:0] sel, b;
	wire [3:0] q_behav, q_struc;
	wire out_behav, out_struc;
	integer i, errors;

	galois_lfsr_behavioral uut_behav(
		.clk(clk),
		.rst(rst),
		.sel(sel),
		.b(b),
		.q(q_behav),
		.out(out_behav)
	);
```

```
	galois_lfsr_structural uut_struc(
		.clk(clk),
		.rst(rst),
		.sel(sel),
		.b(b),
		.q(q_struc),
		.out(out_struc)
	);

	always #5 clk = ~clk;

	task check;
		begin
			if (q_behav !== q_struc || out_behav !== out_struc) begin
				$display("ERROR at t=%0t: Behav q=%b out=%b |
Struct q=%b out=%b", $time, q_behav, out_behav, q_struc, out_struc);
				errors = errors + 1;
			end
		end
	endtask

	initial begin
		clk = 0; rst = 1; sel = 0; b = 0; errors = 0;
		#12;
		rst = 0;
		for (i = 0; i < 20; i = i + 1) begin
			@(posedge clk);
			#1;
			//$display("At t=%0t: Behav expected q=%b out=%b | Struct
expected q=%b out=%b", $time, q_behav, out_behav, q_struc, out_struc);
			check;
		end

		sel = 4'b1111; b = 4'b1010;
		@(posedge clk);
		#1;
		//$display("At t=%0t: Behav expected q=%b out=%b | Struct expected
q=%b out=%b", $time, q_behav, out_behav, q_struc, out_struc);
		check;

		sel = 0;
		for (i = 0; i < 15; i = i + 1) begin
			@(posedge clk);
			#1;
			//$display("At t=%0t: Behav expected q=%b out=%b | Struct
expected q=%b out=%b", $time, q_behav, out_behav, q_struc, out_struc);
			check;
		end

		if (errors == 0)$display("ALL TESTS PASSED");
		else $display("FAILED with %0d errors", errors);
		$finish;
	end
endmodule
```

```
[dthornburg@linux402604 P1]$ ./simv -no_save
Chronologic VCS simulator copyright 1991-2023
Contains Synopsys proprietary information.
Compiler version V-2023.12-SP1-1_Full64; Runtime version V-2023.12-SP1-
  Feb 26 19:29 2026
ALL TESTS PASSED
$finish called from file "tb.v", line 64.
$finish at simulation time                 366
           V C S   S i m u l a t i o n   R e p o r t
Time: 366
CPU Time:      0.180 seconds;       Data structure size:   0.0Mb
Thu Feb 26 19:29:00 2026
[dthornburg@linux402604 P1]$
```

d. Compare the performance of this circuit with that of the Fibonacci LFSR. Which circuit has a better performance?

The Galois LFSR computes faster since it does parallel computation vs Fibonacci.

2. [5 points] Draw an ASM chart and write the RTL Verilog code for a clock divider circuit that has an input clock signal and an output clock signal using the following algorithm:
(i) A counter in the circuit counts repeatedly up from 0 to N-1 at each clock edge
(ii) When the counter reaches N-1, it resets the count to 0 and toggles a 1-bit output clock signal

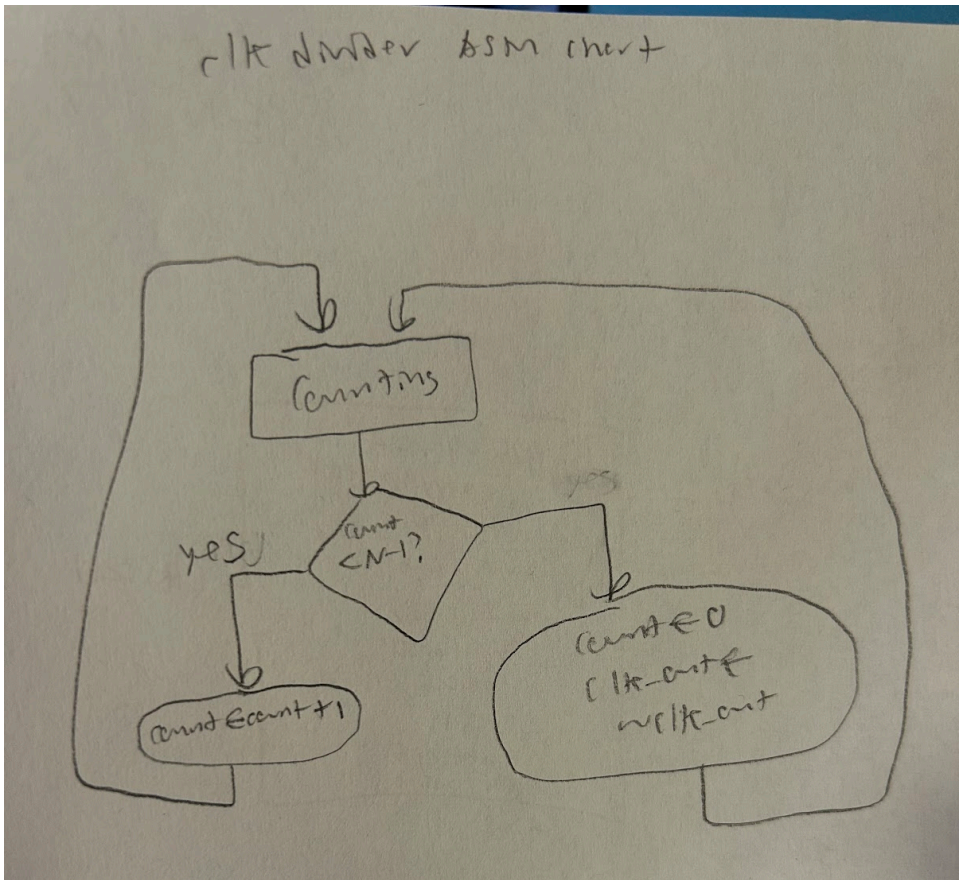

CODE

```
module clock_divider #(parameter N = 5)(
        input clk, rst,
        output reg clk_out
);
        reg [31:0] count;
        always @(posedge clk) begin
                if (rst) begin
                        count <= 0;
                        clk_out <= 0;
                end
                else begin
                        if (count == N - 1) begin
                                count <= 0;
                                clk_out <= ~clk_out;
                        end
                        else count <= count + 1;
                end
        end
endmodule
```

```
module clock_divider_tb;

	reg clk, rst;
	wire clk_out;
	integer i, toggle_count, errors;
	reg prev_clk_out;

	clock_divider #(.N(5)) uut(
		.clk(clk),
		.rst(rst),
		.clk_out(clk_out)
	);

	always #5 clk = ~clk;

	task check_toggle;
		input integer cycle;
		begin
			if (clk_out !== prev_clk_out) begin
				if (cycle % 5 != 0) begin
					$display("ERROR: toggle at wrong cycle %0d",
cycle);
					errors = errors + 1;
				end
				toggle_count = toggle_count + 1;
			end
			prev_clk_out = clk_out;
		end
	endtask

	//initial $monitor("t=%0t rst=%b count=%0d clk_out=%b", $time, rst, uut.count,
clk_out);
	initial begin
		clk = 0; rst = 1; errors = 0; toggle_count = 0;
		#12;
		rst = 0;
		prev_clk_out = clk_out;

		for (i = 1; i <= 40; i = i + 1) begin
			@(posedge clk);
			#1;
			check_toggle(i);
		end

		if (toggle_count == 0) begin
			$display("ERROR: clk_out never toggled");
			errors = errors + 1;
		end

		if (errors == 0) $display("ALL TESTS PASSED - toggled %0d times in 40
cycles", toggle_count);
		else $display("FAILED with %0d errors", errors);
		$finish;
	end
```

```
endmodule
```

```
[dthornburg@linux402604 P2]$ ./simv -no_save
Chronologic VCS simulator copyright 1991-2023
Contains Synopsys proprietary information.
Compiler version V-2023.12-SP1-1_Full64; Runtime version V-2023.12-SP1-1_Full64;
  Feb 26 19:29 2026
ALL TESTS PASSED - toggled 8 times in 40 cycles
$finish called from file "tb.v", line 50.
$finish at simulation time                 406
           V C S   S i m u l a t i o n   R e p o r t
Time: 406
CPU Time:      0.180 seconds;       Data structure size:   0.0Mb
Thu Feb 26 19:29:33 2026
[dthornburg@linux402604 P2]$ S
```

What should the value of N be for an input clock of 100 Mz and an output clock of 1 Hz?

It will be 50,000,000 because count is only incremented on the positive edge of clk.

Synthesize your design in design compiler.

They synthesize.

```
Information: Updating design information... (UID-85)
Library(s) Used:

    lsi_10k (File: /usr/synopsys/syn/V-2023.12-SP3/libraries/syn/lsi_10k.db)

Number of ports:                          67
Number of nets:                          224
Number of cells:                         158
Number of combinational cells:           123
Number of sequential cells:               33
Number of macros/black boxes:              0
Number of buf/inv:                        21
Number of references:                     10

Combinational area:               236.000000
Buf/Inv area:                      21.000000
Noncombinational area:            233.000000
Macro/Black Box area:               0.000000
Net Interconnect area:      undefined  (No wire load specified)

Total cell area:                  469.000000
Total area:                 undefined
1
dc_shell>
```

```
****************************************
Report : timing
        -path full
        -delay max
        -max_paths 1
Design : clock_divider
Version: V-2023.12-SP3
Date   : Thu Feb 26 20:34:02 2026
****************************************

Operating Conditions: nom_pvt   Library: lsi_10k
Wire Load Model Mode: top

  Startpoint: count_reg[16]
              (rising edge-triggered flip-flop clocked by clk)
  Endpoint: count_reg[2]
            (rising edge-triggered flip-flop clocked by clk)
  Path Group: clk
  Path Type: max

  Point                                    Incr       Path
  -----------------------------------------------------------
  clock clk (rise edge)                    0.00       0.00
  clock network delay (ideal)              0.00       0.00
  count_reg[16]/CP (FDS2)                  0.00       0.00 r
  count_reg[16]/Q (FDS2)                   1.85       1.85 f
  U89/Z (NR16P)                            2.53       4.37 r
  U90/Z (ND2)                              0.30       4.67 f
  U91/Z (ND2)                              0.84       5.52 r
  U92/Z (IVA)                              0.43       5.95 f
  U84/Z (IVP)                              0.75       6.70 r
  U82/Z (IVP)                              0.56       7.25 f
  U93/Z (AN2P)                             0.87       8.13 f
  count_reg[2]/D (FD1)                     0.00       8.13 f
  data arrival time                                   8.13

  clock clk (rise edge)                   10.00      10.00
  clock network delay (ideal)              0.00      10.00
  count_reg[2]/CP (FD1)                    0.00      10.00 r
  library setup time                      -0.80       9.20
  data required time                                  9.20
  -----------------------------------------------------------
  data required time                                  9.20
  data arrival time                                  -8.13
  -----------------------------------------------------------
  slack (MET)                                         1.07


1
dc_shell>
```

3. Implement these three designs for the circuit to calculate the mean of eight 18-bit samples discussed in lecture 6.

(a) Serial architecture

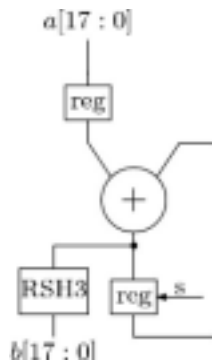

(b) Parallel architecture

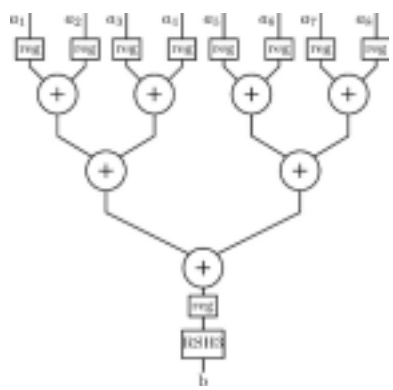

(c) Pipelined architecture

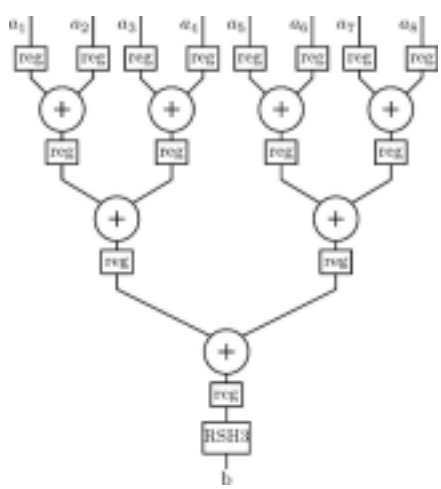

Part A

[5 points] Implement the three designs using structural/dataflow Verilog

Part B

[5 points] Implement the three designs using RTL Verilog.

CODE

```
module serial_structural(
	input clk, rst, s,
	input [17:0] a,
	output [17:0] b
);
	reg [17:0] a_reg;
	reg [20:0] acc;
	wire [20:0] sum;

	assign sum = acc + a_reg;
	assign b = acc[20:3]; //cut off 3 bits = divide by 8 (roughly)
	always @(posedge clk or posedge rst) begin
		if(rst)begin
			a_reg <= 0;
			acc <= 0;
		end
		else begin
			a_reg <= a;
			if(s) acc <= 0;
			else acc <= sum;
		end
	end
endmodule
```

```
module parallel_structural(
	input clk, rst,
	input [17:0] a1, a2, a3, a4, a5, a6, a7, a8,
	output [17:0] b
);
	reg [17:0] r1, r2, r3, r4, r5, r6, r7, r8;
	wire [18:0] s1, s2, s3, s4;
	wire [19:0] s5, s6;
	wire [20:0] s7;
	reg [20:0] total;
	assign s1 = r1 + r2;
	assign s2 = r3 + r4;
	assign s3 = r5 + r6;
	assign s4 = r7 + r8;
	assign s5 = s1 + s2;
```

```
	assign s6 = s3 + s4;
	assign s7 = s5 + s6;
	assign b = total[20:3];
	always @(posedge clk) begin
		if (rst) begin
			r1 <= 0;
			r2 <= 0;
			r3 <= 0;
			r4 <= 0;
			r5 <= 0;
			r6 <= 0;
			r7 <= 0;
			r8 <= 0;
			total <= 0;
		end
		else begin
			r1 <= a1;
			r2 <= a2;
			r3 <= a3;
			r4 <= a4;
			r5 <= a5;
			r6 <= a6;
			r7 <= a7;
			r8 <= a8;
			total <= s7;
		end
	end
endmodule
```

```
module pipeline_structural(
	input clk, rst,
	input [17:0] a1, a2, a3, a4, a5, a6, a7, a8,
	output [17:0] b
);
	reg [17:0] r1, r2, r3, r4, r5, r6, r7, r8;
	wire [18:0] add1, add2, add3, add4;
	reg [18:0] p1, p2, p3, p4;
	wire [19:0] add5, add6;
	reg [19:0] p5, p6;
	wire [20:0] add7;
	reg [20:0] total;

	// stage 1
	assign add1 = r1 + r2;
	assign add2 = r3 + r4;
	assign add3 = r5 + r6;
	assign add4 = r7 + r8;

	// stage 2
	assign add5 = p1 + p2;
	assign add6 = p3 + p4;

	// stage 3
```

```
	assign add7 = p5 + p6;

	assign b = total[20:3];
	always @(posedge clk or posedge rst) begin
		if (rst) begin
			r1 <= 0;
			r2 <= 0;
			r3 <= 0;
			r4 <= 0;
			r5 <= 0;
			r6 <= 0;
			r7 <= 0;
			r8 <= 0;
			p1 <= 0;
			p2 <= 0;
			p3 <= 0;
			p4 <= 0;
			p5 <= 0;
			p6 <= 0;
			total <= 0;
		end
		else begin
			r1 <= a1;
			r2 <= a2;
			r3 <= a3;
			r4 <= a4;
			r5 <= a5;
			r6 <= a6;
			r7 <= a7;
			r8 <= a8;
			// stage 1
			p1 <= add1;
			p2 <= add2;
			p3 <= add3;
			p4 <= add4;
			// stage 2
			p5 <= add5;
			p6 <= add6;
			// stage 3
			total <= add7;
		end
	end
endmodule
```

```
module serial_rtl(
	input clk, rst, s,
	input [17:0] a,
	output reg [17:0] b
);
	reg [17:0] a_reg;
	reg [20:0] acc;
	always @(posedge clk) begin
		if (rst) begin
```

```
                        a_reg <= 0;
                        acc <= 0;
                        b <= 0;
                end
                else begin
                        a_reg <= a;
                        if (s) begin
                                b <= acc[20:3];
                                acc <= 0;
                        end
                        else acc <= acc + a_reg;
                end
        end
endmodule
```

```
module parallel_rtl(
        input clk, rst,
        input [17:0] a1, a2, a3, a4, a5, a6, a7, a8,
        output reg [17:0] b
);
        reg [17:0] r1, r2, r3, r4, r5, r6, r7, r8;
        reg [20:0] total;

        always @(posedge clk) begin
                if (rst) begin
                        r1 <= 0;
                        r2 <= 0;
                        r3 <= 0;
                        r4 <= 0;
                        r5 <= 0;
                        r6 <= 0;
                        r7 <= 0;
                        r8 <= 0;
                        total <= 0;
                        b <= 0;
                end
                else begin
                        r1 <= a1;
                        r2 <= a2;
                        r3 <= a3;
                        r4 <= a4;
                        r5 <= a5;
                        r6 <= a6;
                        r7 <= a7;
                        r8 <= a8;
                        total <= ((r1 + r2) + (r3 + r4)) + ((r5 + r6) + (r7 + r8));
                        b <= total[20:3];
                end
        end
endmodule
```

```
module pipeline_rtl(
```

```
	input clk, rst,
	input [17:0] a1, a2, a3, a4, a5, a6, a7, a8,
	output reg [17:0] b
);
	reg [17:0] r1, r2, r3, r4, r5, r6, r7, r8;
	reg [18:0] p1, p2, p3, p4;
	reg [19:0] p5, p6;
	reg [20:0] total;

	always @(posedge clk) begin
		if (rst) begin
			r1 <= 0;
			r2 <= 0;
			r3 <= 0;
			r4 <= 0;
			r5 <= 0;
			r6 <= 0;
			r7 <= 0;
			r8 <= 0;
			p1 <= 0;
			p2 <= 0;
			p3 <= 0;
			p4 <= 0;
			p5 <= 0;
			p6 <= 0;
			total <= 0;
			b <= 0;
		end
		else begin
			r1 <= a1;
			r2 <= a2;
			r3 <= a3;
			r4 <= a4;
			r5 <= a5;
			r6 <= a6;
			r7 <= a7;
			r8 <= a8;
			// stage 1
			p1 <= r1 + r2;
			p2 <= r3 + r4;
			p3 <= r5 + r6;
			p4 <= r7 + r8;
			// stage 2
			p5 <= p1 + p2;
			p6 <= p3 + p4;
			// stage 3
			total <= p5 + p6;

			b <= total[20:3];
		end
	end
endmodule
```

```
module serial_tb();
	reg clk, rst, s;
	reg [17:0] a;
	wire [17:0] b_ss, b_sr;
	integer i, errors;
	reg [17:0] samples [0:7];
	reg [20:0] total;
	reg [17:0] expected;

	serial_structural ss(
		.clk(clk),
		.rst(rst),
		.s(s),
		.a(a),
		.b(b_ss)
	);

	serial_rtl sr(
		.clk(clk),
		.rst(rst),
		.s(s),
		.a(a),
		.b(b_sr)
	);

	always #5 clk = ~clk;

	task check;
		input [17:0] got;
		input [8*20:1] name;
		begin
			if (got !== expected) begin
				$display("ERROR %0s: got %0d, expected %0d", name, got,
expected);
				errors = errors + 1;
			end
		end
	endtask

	initial begin
		clk = 0; rst = 1; s = 0; a = 0; errors = 0;
		samples[0] = 18'd100;
		samples[1] = 18'd200;
		samples[2] = 18'd300;
		samples[3] = 18'd400;
		samples[4] = 18'd500;
		samples[5] = 18'd600;
		samples[6] = 18'd700;
		samples[7] = 18'd800;
		total = 0;
		for (i = 0; i < 8; i = i + 1) total = total + samples[i];
		expected = total[20:3];
		#12;
		rst = 0;
```

```
		// clear
		s = 1;
		@(posedge clk);
		#1;
		s = 0;
		// feed 8 samples
		for (i = 0; i < 8; i = i + 1) begin
			a = samples[i];
			@(posedge clk);
			#1;
		end
		@(posedge clk);
		#1;
		// structural b is combinational, check now
		$display("Expected mean = %0d", expected);
		check(b_ss, "serial_struct");
		// pulse s to latch rtl b
		s = 1;
		@(posedge clk);
		#1;
		s = 0;
		check(b_sr, "serial_rtl");
		if (errors == 0) $display("ALL TESTS PASSED");
		else $display("FAILED with %0d errors", errors);
		$finish;
	end
endmodule
```

```
module par_pipe_tb();
	reg clk, rst;
	reg [17:0] a1, a2, a3, a4, a5, a6, a7, a8;
	wire [17:0] b_ps, b_pr, b_pps, b_ppr;
	integer i, errors;
	reg [20:0] total;
	reg [17:0] expected;

	parallel_structural ps(
		.clk(clk),
		.rst(rst),
		.a1(a1),
		.a2(a2),
		.a3(a3),
		.a4(a4),
		.a5(a5),
		.a6(a6),
		.a7(a7),
		.a8(a8),
		.b(b_ps)
	);

	parallel_rtl pr(
		.clk(clk),
		.rst(rst),
```

```
		.a1(a1),
		.a2(a2),
		.a3(a3),
		.a4(a4),
		.a5(a5),
		.a6(a6),
		.a7(a7),
		.a8(a8),
		.b(b_pr)
	);

	pipeline_structural pps(
		.clk(clk),
		.rst(rst),
		.a1(a1),
		.a2(a2),
		.a3(a3),
		.a4(a4),
		.a5(a5),
		.a6(a6),
		.a7(a7),
		.a8(a8),
		.b(b_pps)
	);

	pipeline_rtl ppr(
		.clk(clk),
		.rst(rst),
		.a1(a1),
		.a2(a2),
		.a3(a3),
		.a4(a4),
		.a5(a5),
		.a6(a6),
		.a7(a7),
		.a8(a8),
		.b(b_ppr)
	);

	always #5 clk = ~clk;

	task check;
		input [17:0] got;
		input [8*20:1] name;
		begin
			if (got !== expected) begin
				$display("ERROR %0s: got %0d, expected %0d", name, got,
expected);
				errors = errors + 1;
			end
		end
	endtask

	initial begin
```

```
            clk = 0; rst = 1; errors = 0;
            a1 = 18'd100;
            a2 = 18'd200;
            a3 = 18'd300;
            a4 = 18'd400;
            a5 = 18'd500;
            a6 = 18'd600;
            a7 = 18'd700;
            a8 = 18'd800;
            total = a1 + a2 + a3 + a4 + a5 + a6 + a7 + a8;
            expected = total[20:3];
            #12;
            rst = 0;
            // wait for pipeline to flush
            for (i = 0; i < 6; i = i + 1) @(posedge clk);
            #1;
            $display("Expected mean = %0d", expected);
            check(b_ps, "parallel_struct");
            check(b_pr, "parallel_rtl");
            check(b_pps, "pipeline_struct");
            check(b_ppr, "pipeline_rtl");
            if (errors == 0) $display("ALL TESTS PASSED");
            else $display("FAILED with %0d errors", errors);
            $finish;
        end
endmodule
```

Serial TB (RTL + Structural) Results

```
CPU time: .338 seconds to compile + .272 seconds to elab + .297 seconds to link
Verdi KDB elaboration done and the database successfully generated: 0 error(s), 0 warning(s)
[dthornburg@linux402604 P3]$ ./simv -no_save
Chronologic VCS simulator copyright 1991-2023
Contains Synopsys proprietary information.
Compiler version V-2023.12-SP1-1_Full64; Runtime version V-2023.12-SP1-1_Full64;  Feb 27 01:34 2026
Expected mean = 450
ALL TESTS PASSED
$finish called from file "serial_tb.v", line 78.
$finish at simulation time                 116
           V C S   S i m u l a t i o n   R e p o r t
Time: 116
CPU Time:      0.200 seconds;       Data structure size:   0.0Mb
Fri Feb 27 01:34:24 2026
[dthornburg@linux402604 P3]$
```

Parallel/Pipelined TB (RTL + Structural) Results

```
[dthornburg@linux402604 P3]$ ./simv -no_save
Chronologic VCS simulator copyright 1991-2023
Contains Synopsys proprietary information.
Compiler version V-2023.12-SP1-1_Full64; Runtime version V-2023.12-SP1-1_Full64;  Feb 27 01:31 2026
Expected mean = 450
ALL TESTS PASSED
$finish called from file "pipeline_parallel_tb.v", line 102.
$finish at simulation time                  66
           V C S   S i m u l a t i o n   R e p o r t
Time: 66
CPU Time:      0.180 seconds;       Data structure size:   0.0Mb
Fri Feb 27 01:31:45 2026
[dthornburg@linux402604 P3]$
```

Part C

[5 points] Check that all the programs in B are synthesizable in design compiler; otherwise, modify them so that they synthesize correctly.

Optimize the designs for area using “medium” effort. Report the area, timing path and power consumption of the designs in part A or B.

Serial Structural

```
****************************************
Report : area
Design : serial_structural
Version: V-2023.12-SP3
Date   : Fri Feb 27 01:45:06 2026
****************************************

Information: Updating design information... (UID-85)
Library(s) Used:

    lsi_10k (File: /usr/synopsys/syn/V-2023.12-SP3/libraries/syn/lsi_10k.db)

Number of ports:                          104
Number of nets:                           352
Number of cells:                          269
Number of combinational cells:            228
Number of sequential cells:               39
Number of macros/black boxes:             0
Number of buf/inv:                        59
Number of references:                     7

Combinational area:               363.000000
Buf/Inv area:                     60.000000
Noncombinational area:            363.000000
Macro/Black Box area:             0.000000
Net Interconnect area:      undefined  (No wire load specified)

Total cell area:                  726.000000
Total area:                 undefined
1
```

```
****************************************
Report : timing
        -path full
        -delay max
        -max_paths 1
Design : serial_structural
```

```
Version: V-2023.12-SP3
Date   : Fri Feb 27 01:45:06 2026
****************************************

Operating Conditions: nom_pvt   Library: lsi_10k
Wire Load Model Mode: top

  Startpoint: a_reg_reg[0]
              (rising edge-triggered flip-flop clocked by clk)
  Endpoint: acc_reg[15]
            (rising edge-triggered flip-flop clocked by clk)
  Path Group: clk
  Path Type: max

  Point                                          Incr       Path
  -----------------------------------------------------------------------------
  clock clk (rise edge)                          0.00       0.00
  clock network delay (ideal)                    0.00       0.00
  a_reg_reg[0]/CP (FD2P)                         0.00       0.00 r
  a_reg_reg[0]/Q (FD2P)                          1.63       1.63 r
  add_10/B[0] (serial_structural_DW01_add_1)     0.00       1.63 r
  add_10/U200/Z (ND2P)                           0.30       1.92 f
  add_10/U192/Z (ND2P)                           0.69       2.61 r
  add_10/U191/Z (ND4P)                           0.57       3.18 f
  add_10/U189/Z (ND3P)                           0.84       4.02 r
  add_10/U31/Z (ND2P)                            0.30       4.31 f
  add_10/U127/Z (ND3P)                           0.77       5.09 r
  add_10/U37/Z (ND3P)                            0.52       5.61 f
  add_10/U182/Z (ND3P)                           0.77       6.38 r
  add_10/U148/Z (ND2)                            0.22       6.60 f
  add_10/U180/Z (ND2)                            0.64       7.23 r
  add_10/U54/Z (ENP)                             1.09       8.32 f
  add_10/SUM[15] (serial_structural_DW01_add_1)  0.00       8.32 f
  U53/Z (AN2)                                    0.82       9.15 f
  acc_reg[15]/D (FD2)                            0.00       9.15 f
  data arrival time                                         9.15

  clock clk (rise edge)                          10.00      10.00
  clock network delay (ideal)                    0.00       10.00
  acc_reg[15]/CP (FD2)                           0.00       10.00 r
  library setup time                             -0.85      9.15
  data required time                                        9.15
  -----------------------------------------------------------------------------
  data required time                                        9.15
  data arrival time                                         -9.15
  -----------------------------------------------------------------------------
  slack (MET)                                               0.00


1
```

```
Warning: Main library 'lsi_10k' does not specify the following unit required for power: 'Leakage
Power'. (PWR-424)
```

```
Information: Propagating switching activity (low effort zero delay simulation). (PWR-6)
Warning: Design has unannotated primary inputs. (PWR-414)
Warning: Design has unannotated sequential cell outputs. (PWR-415)

****************************************
Report : power
        -analysis_effort low
Design : serial_structural
Version: V-2023.12-SP3
Date   : Fri Feb 27 01:45:06 2026
****************************************


Library(s) Used:

    lsi_10k (File: /usr/synopsys/syn/V-2023.12-SP3/libraries/syn/lsi_10k.db)

Information: The cells in your design are not characterized for internal power. (PWR-229)

Operating Conditions: nom_pvt   Library: lsi_10k
Wire Load Model Mode: top


Global Operating Voltage = 5
Power-specific unit information :
    Voltage Units = 1V
    Capacitance Units = 0.100000ff
    Time Units = 1ns
    Dynamic Power Units = 100nW    (derived from V,C,T units)
    Leakage Power Units = Unitless


Attributes
----------
i - Including register clock pin internal power


  Cell Internal Power  =   0.0000 nW    (0%)
  Net Switching Power  =   9.6815 uW  (100%)
                         ---------
Total Dynamic Power    =   9.6815 uW  (100%)

Cell Leakage Power     =   0.0000

Error: Either dynamic power or leakage power, in the library, is unitless. Unable to display
complete power group summary. (PWR-799)

                 Internal         Switching          Leakage           Total
Power Group      Power            Power              Power             Power   (   %    )  Attrs
--------------------------------------------------------------------------------------------------
io_pad             0.0000           0.0000           0.0000            NA   (     N/A)
memory             0.0000           0.0000           0.0000            NA   (     N/A)
black_box          0.0000           0.0000           0.0000            NA   (     N/A)
clock_network      0.0000           0.0000           0.0000            NA   (     N/A)  i
```

```
register          0.0000       1.5927e+03          0.0000            NA   (     N/A)
sequential        0.0000          0.0000          0.0000            NA   (     N/A)
combinational     0.0000       8.0888e+03          0.0000            NA   (     N/A)
--------------------------------------------------------------------------------------------------
Total             0.0000 nW    9.6815e+03 nW       0.0000            NA
1
```

Serial RTL

```
****************************************
Report : area
Design : serial_rtl
Version: V-2023.12-SP3
Date   : Fri Feb 27 01:46:58 2026
****************************************

Information: Updating design information... (UID-85)
Library(s) Used:

    lsi_10k (File: /usr/synopsys/syn/V-2023.12-SP3/libraries/syn/lsi_10k.db)

Number of ports:                          104
Number of nets:                           423
Number of cells:                          305
Number of combinational cells:            246
Number of sequential cells:               57
Number of macros/black boxes:             0
Number of buf/inv:                        46
Number of references:                     11

Combinational area:               400.000000
Buf/Inv area:                     47.000000
Noncombinational area:            409.000000
Macro/Black Box area:             0.000000
Net Interconnect area:      undefined  (No wire load specified)

Total cell area:                  809.000000
Total area:                 undefined
1
```

```
****************************************
Report : timing
        -path full
        -delay max
        -max_paths 1
Design : serial_rtl
Version: V-2023.12-SP3
Date   : Fri Feb 27 01:46:58 2026
****************************************
```

```
Operating Conditions: nom_pvt   Library: lsi_10k
Wire Load Model Mode: top

  Startpoint: a_reg_reg[1]
            (rising edge-triggered flip-flop clocked by clk)
  Endpoint: acc_reg[15]
          (rising edge-triggered flip-flop clocked by clk)
  Path Group: clk
  Path Type: max

  Point                                    Incr       Path
  -----------------------------------------------------------------------------
  clock clk (rise edge)                    0.00       0.00
  clock network delay (ideal)                0.00       0.00
  a_reg_reg[1]/CP (FD1P)                     0.00       0.00 r
  a_reg_reg[1]/Q (FD1P)                      1.36       1.36 r
  add_20/B[1] (serial_rtl_DW01_add_1)                0.00       1.36 r
  add_20/U9/Z (ND2)                        0.30       1.66 f
  add_20/U152/Z (ND2)                        0.78       2.43 r
  add_20/U181/Z (ND4P)                       0.57       3.00 f
  add_20/U179/Z (ND3P)                       0.97       3.97 r
  add_20/U7/Z (ND2)                        0.30       4.27 f
  add_20/U6/Z (ND3)                        0.79       5.07 r
  add_20/U5/Z (ND4)                        0.59       5.66 f
  add_20/U21/Z (ND2)                         0.78       6.43 r
  add_20/U23/Z (ND2)                         0.22       6.65 f
  add_20/U176/Z (ND2)                        0.64       7.29 r
  add_20/U3/Z (ENP)                        1.09       8.38 f
  add_20/SUM[15] (serial_rtl_DW01_add_1)             0.00       8.38 f
  U103/Z (AN2)                             0.82       9.20 f
  acc_reg[15]/D (FD1)                      0.00       9.20 f
  data arrival time                                   9.20

  clock clk (rise edge)                   10.00      10.00
  clock network delay (ideal)                0.00      10.00
  acc_reg[15]/CP (FD1)                       0.00      10.00 r
  library setup time                      -0.80       9.20
  data required time                                  9.20
  -----------------------------------------------------------------------------
  data required time                                  9.20
  data arrival time                                  -9.20
  -----------------------------------------------------------------------------
  slack (MET)                                         0.00


1
```

```
Warning: Main library 'lsi_10k' does not specify the following unit required for power: 'Leakage
Power'. (PWR-424)
Information: Propagating switching activity (low effort zero delay simulation). (PWR-6)
Warning: Design has unannotated primary inputs. (PWR-414)
Warning: Design has unannotated sequential cell outputs. (PWR-415)
```

```
****************************************
Report : power
        -analysis_effort low
Design : serial_rtl
Version: V-2023.12-SP3
Date   : Fri Feb 27 01:47:00 2026
****************************************


Library(s) Used:

    lsi_10k (File: /usr/synopsys/syn/V-2023.12-SP3/libraries/syn/lsi_10k.db)

Information: The cells in your design are not characterized for internal power. (PWR-229)

Operating Conditions: nom_pvt   Library: lsi_10k
Wire Load Model Mode: top


Global Operating Voltage = 5
Power-specific unit information :
    Voltage Units = 1V
    Capacitance Units = 0.100000ff
    Time Units = 1ns
    Dynamic Power Units = 100nW    (derived from V,C,T units)
    Leakage Power Units = Unitless


Attributes
----------
i - Including register clock pin internal power


  Cell Internal Power  =   0.0000 nW    (0%)
  Net Switching Power  =   8.8009 uW  (100%)
                         ---------
Total Dynamic Power    =   8.8009 uW  (100%)

Cell Leakage Power     =   0.0000

Error: Either dynamic power or leakage power, in the library, is unitless. Unable to display
complete power group summary. (PWR-799)

                 Internal         Switching          Leakage           Total
Power Group      Power            Power              Power             Power   (   %    )  Attrs
--------------------------------------------------------------------------------------------
io_pad             0.0000           0.0000           0.0000            NA   (     N/A)
memory             0.0000           0.0000           0.0000            NA   (     N/A)
black_box          0.0000           0.0000           0.0000            NA   (     N/A)
clock_network      0.0000           0.0000           0.0000            NA   (     N/A)  i
register           0.0000       1.7653e+03           0.0000            NA   (     N/A)
sequential         0.0000           0.0000           0.0000            NA   (     N/A)
combinational      0.0000       7.0356e+03           0.0000            NA   (     N/A)
--------------------------------------------------------------------------------------------
```

```
Total            0.0000 nW     8.8009e+03 nW        0.0000             NA
1
```

Parallel Structural

```
****************************************
Report : area
Design : parallel_structural
Version: V-2023.12-SP3
Date   : Fri Feb 27 01:47:17 2026
****************************************

Information: Updating design information... (UID-85)
Library(s) Used:

    lsi_10k (File: /usr/synopsys/syn/V-2023.12-SP3/libraries/syn/lsi_10k.db)

Number of ports:                          610
Number of nets:                          2321
Number of cells:                         1779
Number of combinational cells:           1596
Number of sequential cells:               162
Number of macros/black boxes:               0
Number of buf/inv:                        374
Number of references:                      14

Combinational area:              2783.000000
Buf/Inv area:                     431.000000
Noncombinational area:           1250.000000
Macro/Black Box area:               0.000000
Net Interconnect area:      undefined  (No wire load specified)

Total cell area:                 4033.000000
Total area:                 undefined
1
```

```
****************************************
Report : timing
        -path full
        -delay max
        -max_paths 1
Design : parallel_structural
Version: V-2023.12-SP3
Date   : Fri Feb 27 01:47:17 2026
****************************************

Operating Conditions: nom_pvt   Library: lsi_10k
Wire Load Model Mode: top

  Startpoint: r4_reg[3] (rising edge-triggered flip-flop clocked by clk)
```

```
Endpoint: total_reg[19]
        (rising edge-triggered flip-flop clocked by clk)
Path Group: clk
Path Type: max

Point                                          Incr       Path
-----------------------------------------------------------------------------
clock clk (rise edge)                          0.00       0.00
clock network delay (ideal)                    0.00       0.00
r4_reg[3]/CP (FD1P)                            0.00       0.00 r
r4_reg[3]/Q (FD1P)                             1.49       1.49 r
add_4_root_add_0_root_add_17/B[3] (parallel_structural_DW01_add_16)
                                               0.00       1.49 r
add_4_root_add_0_root_add_17/U16/Z (B5I)       0.19       1.68 f
add_4_root_add_0_root_add_17/U28/Z (ND2P)      0.62       2.30 r
add_4_root_add_0_root_add_17/U30/Z (AO3P)      0.53       2.83 f
add_4_root_add_0_root_add_17/U23/Z (IVP)       0.56       3.39 r
add_4_root_add_0_root_add_17/U33/Z (ND2)       0.22       3.60 f
add_4_root_add_0_root_add_17/U137/Z (ND2)      0.78       4.38 r
add_4_root_add_0_root_add_17/U156/Z (AO7P)     0.37       4.75 f
add_4_root_add_0_root_add_17/U155/Z (ND2P)     0.56       5.31 r
add_4_root_add_0_root_add_17/U65/Z (ENP)       1.21       6.52 f
add_4_root_add_0_root_add_17/SUM[6] (parallel_structural_DW01_add_16)
                                               0.00       6.52 f
add_1_root_add_0_root_add_17/B[6] (parallel_structural_DW01_add_11)
                                               0.00       6.52 f
add_1_root_add_0_root_add_17/U38/Z (AO4P)      1.16       7.69 r
add_1_root_add_0_root_add_17/U142/Z (NR2P)     0.26       7.95 f
add_1_root_add_0_root_add_17/U195/Z (AO7P)     0.76       8.71 r
add_1_root_add_0_root_add_17/U30/Z (ND3)       0.60       9.31 f
add_1_root_add_0_root_add_17/U33/Z (ND2P)      0.62       9.94 r
add_1_root_add_0_root_add_17/U34/Z (AO3)       0.50      10.44 f
add_1_root_add_0_root_add_17/U154/Z (AO3)      0.78      11.22 r
add_1_root_add_0_root_add_17/U74/Z (ND2)       0.30      11.52 f
add_1_root_add_0_root_add_17/U137/Z (ND2)      0.64      12.16 r
add_1_root_add_0_root_add_17/U136/Z (ND2)      0.22      12.38 f
add_1_root_add_0_root_add_17/U52/Z (ENP)       1.38      13.75 f
add_1_root_add_0_root_add_17/SUM[14] (parallel_structural_DW01_add_11)
                                               0.00      13.75 f
add_0_root_add_0_root_add_17/B[14] (parallel_structural_DW01_add_15)
                                               0.00      13.75 f
add_0_root_add_0_root_add_17/U39/Z (NR2)       0.81      14.56 r
add_0_root_add_0_root_add_17/U105/Z (NR2)      0.31      14.87 f
add_0_root_add_0_root_add_17/U152/Z (ND4)      0.79      15.66 r
add_0_root_add_0_root_add_17/U49/Z (ND4)       0.87      16.54 f
add_0_root_add_0_root_add_17/U45/Z (AO6P)      0.93      17.47 r
add_0_root_add_0_root_add_17/U150/Z (AO7)      0.45      17.92 f
add_0_root_add_0_root_add_17/U61/Z (ENP)       1.09      19.01 f
add_0_root_add_0_root_add_17/SUM[19] (parallel_structural_DW01_add_15)
                                               0.00      19.01 f
total_reg[19]/CR (FDS2)                        0.00      19.01 f
data arrival time                                        19.01

clock clk (rise edge)                          10.00      10.00
```

```
  clock network delay (ideal)                    0.00      10.00
  total_reg[19]/CP (FDS2)                        0.00      10.00 r
  library setup time                            -0.90       9.10
  data required time                                        9.10
  -------------------------------------------------------------------------
  data required time                                        9.10
  data arrival time                                       -19.01
  -------------------------------------------------------------------------
  slack (VIOLATED)                                         -9.91


1
```

```
Warning: Main library 'lsi_10k' does not specify the following unit required for power: 'Leakage
Power'. (PWR-424)
Information: Propagating switching activity (low effort zero delay simulation). (PWR-6)
Warning: Design has unannotated primary inputs. (PWR-414)
Warning: Design has unannotated sequential cell outputs. (PWR-415)

****************************************
Report : power
        -analysis_effort low
Design : parallel_structural
Version: V-2023.12-SP3
Date   : Fri Feb 27 01:47:19 2026
****************************************


Library(s) Used:

    lsi_10k (File: /usr/synopsys/syn/V-2023.12-SP3/libraries/syn/lsi_10k.db)

Information: The cells in your design are not characterized for internal power. (PWR-229)

Operating Conditions: nom_pvt   Library: lsi_10k
Wire Load Model Mode: top


Global Operating Voltage = 5
Power-specific unit information :
    Voltage Units = 1V
    Capacitance Units = 0.100000ff
    Time Units = 1ns
    Dynamic Power Units = 100nW    (derived from V,C,T units)
    Leakage Power Units = Unitless


Attributes
----------
i - Including register clock pin internal power


  Cell Internal Power  =   0.0000 nW    (0%)
```

```
  Net Switching Power  =  66.9846 uW  (100%)
                    ---------
Total Dynamic Power    =  66.9846 uW  (100%)

Cell Leakage Power     =   0.0000

Error: Either dynamic power or leakage power, in the library, is unitless. Unable to display
complete power group summary. (PWR-799)

                Internal        Switching          Leakage           Total
Power Group      Power           Power             Power            Power   (   %    )  Attrs
--------------------------------------------------------------------------------------------------
io_pad            0.0000          0.0000           0.0000            NA   (     N/A)
memory            0.0000          0.0000           0.0000            NA   (     N/A)
black_box         0.0000          0.0000           0.0000            NA   (     N/A)
clock_network     0.0000          0.0000           0.0000            NA   (     N/A)  i
register          0.0000       5.8513e+03          0.0000            NA   (     N/A)
sequential        0.0000          0.0000           0.0000            NA   (     N/A)
combinational     0.0000       6.1133e+04          0.0000            NA   (     N/A)
--------------------------------------------------------------------------------------------------
Total             0.0000 nW     6.6985e+04 nW        0.0000            NA
1
```

Parallel RTL

```
****************************************
Report : area
Design : parallel_rtl
Version: V-2023.12-SP3
Date   : Fri Feb 27 01:47:43 2026
****************************************

Information: Updating design information... (UID-85)
Library(s) Used:

    lsi_10k (File: /usr/synopsys/syn/V-2023.12-SP3/libraries/syn/lsi_10k.db)

Number of ports:                          589
Number of nets:                          2551
Number of cells:                         2005
Number of combinational cells:           1810
Number of sequential cells:               180
Number of macros/black boxes:               0
Number of buf/inv:                        407
Number of references:                      14

Combinational area:              3181.000000
Buf/Inv area:                     487.000000
Noncombinational area:           1386.000000
Macro/Black Box area:               0.000000
Net Interconnect area:      undefined  (No wire load specified)
```

```
Total cell area:          4567.000000
Total area:          undefined
1
```

```
****************************************
Report : timing
        -path full
        -delay max
        -max_paths 1
Design : parallel_rtl
Version: V-2023.12-SP3
Date   : Fri Feb 27 01:47:43 2026
****************************************

Operating Conditions: nom_pvt   Library: lsi_10k
Wire Load Model Mode: top

  Startpoint: r8_reg[1] (rising edge-triggered flip-flop clocked by clk)
  Endpoint: total_reg[17]
            (rising edge-triggered flip-flop clocked by clk)
  Path Group: clk
  Path Type: max

  Point                                          Incr       Path
  -----------------------------------------------------------------------------
  clock clk (rise edge)                          0.00       0.00
  clock network delay (ideal)                    0.00       0.00
  r8_reg[1]/CP (FD1P)                            0.00       0.00 r
  r8_reg[1]/Q (FD1P)                             1.61       1.61 f
  add_31_5/B[1] (parallel_rtl_DW01_add_41)       0.00       1.61 f
  add_31_5/U60/Z (IVAP)                          0.33       1.94 r
  add_31_5/U27/Z (ND2)                           0.22       2.16 f
  add_31_5/U51/Z (AN3)                           0.97       3.12 f
  add_31_5/U54/Z (ND2P)                          0.75       3.87 r
  add_31_5/U44/Z (ND3P)                          0.57       4.44 f
  add_31_5/U8/Z (ND2P)                           0.56       5.01 r
  add_31_5/U152/Z (AO3)                          0.50       5.51 f
  add_31_5/U167/Z (ENP)                          1.15       6.66 f
  add_31_5/SUM[7] (parallel_rtl_DW01_add_41)     0.00       6.66 f
  add_31_6/B[7] (parallel_rtl_DW01_add_35)       0.00       6.66 f
  add_31_6/U144/Z (ND2)                          0.78       7.44 r
  add_31_6/U56/Z (AN2P)                          0.76       8.19 r
  add_31_6/U193/Z (AO3P)                         0.53       8.73 f
  add_31_6/U148/Z (ND3P)                         0.84       9.57 r
  add_31_6/U9/Z (ND3)                            0.60      10.17 f
  add_31_6/U178/Z (AO6P)                         0.93      11.10 r
  add_31_6/U90/Z (EOP)                           1.26      12.35 f
  add_31_6/SUM[14] (parallel_rtl_DW01_add_35)    0.00      12.35 f
  add_31_7/B[14] (parallel_rtl_DW01_add_38)      0.00      12.35 f
  add_31_7/U79/Z (AO3)                           0.78      13.13 r
  add_31_7/U80/Z (IV)                            0.27      13.40 f
  add_31_7/U107/Z (ND3P)                         0.77      14.18 r
```

```
  add_31_7/U49/Z (ND2)                          0.30      14.48 f
  add_31_7/U215/Z (NR2P)                          0.82      15.29 r
  add_31_7/U170/Z (ND3P)                          0.57      15.87 f
  add_31_7/U202/Z (ND2)                          0.64      16.50 r
  add_31_7/U198/Z (ND2)                          0.22      16.72 f
  add_31_7/U171/Z (ENP)                          1.09      17.81 f
  add_31_7/SUM[17] (parallel_rtl_DW01_add_38)           0.00      17.81 f
  total_reg[17]/CR (FDS2)                       0.00      17.81 f
  data arrival time                                17.81

  clock clk (rise edge)                        10.00      10.00
  clock network delay (ideal)                     0.00      10.00
  total_reg[17]/CP (FDS2)                       0.00      10.00 r
  library setup time                          -0.90       9.10
  data required time                                   9.10
  -----------------------------------------------------------------------------
  data required time                                   9.10
  data arrival time                                  -17.81
  -----------------------------------------------------------------------------
  slack (VIOLATED)                                    -8.71


1
```

```
Warning: Main library 'lsi_10k' does not specify the following unit required for power: 'Leakage
Power'. (PWR-424)
Information: Propagating switching activity (low effort zero delay simulation). (PWR-6)
Warning: Design has unannotated primary inputs. (PWR-414)
Warning: Design has unannotated sequential cell outputs. (PWR-415)

****************************************
Report : power
        -analysis_effort low
Design : parallel_rtl
Version: V-2023.12-SP3
Date   : Fri Feb 27 01:47:45 2026
****************************************


Library(s) Used:

    lsi_10k (File: /usr/synopsys/syn/V-2023.12-SP3/libraries/syn/lsi_10k.db)

Information: The cells in your design are not characterized for internal power. (PWR-229)

Operating Conditions: nom_pvt   Library: lsi_10k
Wire Load Model Mode: top


Global Operating Voltage = 5
Power-specific unit information :
    Voltage Units = 1V
    Capacitance Units = 0.100000ff
```

```
   Time Units = 1ns
   Dynamic Power Units = 100nW    (derived from V,C,T units)
   Leakage Power Units = Unitless


Attributes
----------
i - Including register clock pin internal power


  Cell Internal Power  =   0.0000 nW    (0%)
  Net Switching Power  =  76.8646 uW  (100%)
                         ---------
Total Dynamic Power    =  76.8646 uW  (100%)

Cell Leakage Power     =   0.0000

Error: Either dynamic power or leakage power, in the library, is unitless. Unable to display
complete power group summary. (PWR-799)

                 Internal         Switching           Leakage           Total
Power Group      Power            Power               Power             Power   (   %    )  Attrs
--------------------------------------------------------------------------------------------------
io_pad             0.0000           0.0000           0.0000            NA   (     N/A)
memory             0.0000           0.0000           0.0000            NA   (     N/A)
black_box          0.0000           0.0000           0.0000            NA   (     N/A)
clock_network      0.0000           0.0000           0.0000            NA   (     N/A)  i
register           0.0000       6.6484e+03           0.0000            NA   (     N/A)
sequential         0.0000           0.0000           0.0000            NA   (     N/A)
combinational      0.0000       7.0216e+04           0.0000            NA   (     N/A)
--------------------------------------------------------------------------------------------------
Total              0.0000 nW    7.6865e+04 nW        0.0000            NA
1
```

Pipeline Structural

```
****************************************
Report : area
Design : pipeline_structural
Version: V-2023.12-SP3
Date   : Fri Feb 27 01:47:57 2026
****************************************


Information: Updating design information... (UID-85)
Library(s) Used:

   lsi_10k (File: /usr/synopsys/syn/V-2023.12-SP3/libraries/syn/lsi_10k.db)

Number of ports:                          589
Number of nets:                          2479
Number of cells:                         1943
Number of combinational cells:           1651
```

```
Number of sequential cells:              278
Number of macros/black boxes:              0
Number of buf/inv:                       432
Number of references:                     11

Combinational area:              2321.000000
Buf/Inv area:                     434.000000
Noncombinational area:           2508.000000
Macro/Black Box area:               0.000000
Net Interconnect area:      undefined  (No wire load specified)

Total cell area:                 4829.000000
Total area:                 undefined
1
```

```
****************************************
Report : timing
       -path full
       -delay max
       -max_paths 1
Design : pipeline_structural
Version: V-2023.12-SP3
Date   : Fri Feb 27 01:47:57 2026
****************************************

Operating Conditions: nom_pvt   Library: lsi_10k
Wire Load Model Mode: top

  Startpoint: p6_reg[6] (rising edge-triggered flip-flop clocked by clk)
  Endpoint: total_reg[19]
          (rising edge-triggered flip-flop clocked by clk)
  Path Group: clk
  Path Type: max

  Point                                          Incr       Path
  -----------------------------------------------------------------------------
  clock clk (rise edge)                          0.00       0.00
  clock network delay (ideal)                     0.00       0.00
  p6_reg[6]/CP (FD2)                             0.00       0.00 r
  p6_reg[6]/Q (FD2)                              1.53       1.53 f
  add_25/B[6] (pipeline_structural_DW01_add_7)          0.00       1.53 f
  add_25/U17/Z (OR2P)                             1.08       2.61 f
  add_25/U5/Z (ND2)                              0.64       3.24 r
  add_25/U4/Z (ND4)                              0.73       3.98 f
  add_25/U169/Z (ND3)                             0.79       4.77 r
  add_25/U167/Z (ND6P)                            1.46       6.23 f
  add_25/U2/Z (B4I)                              0.45       6.68 r
  add_25/U12/Z (AO7P)                             0.41       7.09 f
  add_25/U163/Z (AO6P)                            0.93       8.02 r
  add_25/U24/Z (EO)                              1.13       9.15 f
  add_25/SUM[19] (pipeline_structural_DW01_add_7)        0.00       9.15 f
  total_reg[19]/D (FD2)                          0.00       9.15 f
```

```
  data arrival time                                   9.15

  clock clk (rise edge)                          10.00      10.00
  clock network delay (ideal)                        0.00      10.00
  total_reg[19]/CP (FD2)                          0.00      10.00 r
  library setup time                            -0.85       9.15
  data required time                                        9.15
  -------------------------------------------------------------------------
  data required time                                        9.15
  data arrival time                                        -9.15
  -------------------------------------------------------------------------
  slack (MET)                                               0.00


1
```

```
Warning: Main library 'lsi_10k' does not specify the following unit required for power: 'Leakage
Power'. (PWR-424)
Information: Propagating switching activity (low effort zero delay simulation). (PWR-6)
Warning: Design has unannotated primary inputs. (PWR-414)
Warning: Design has unannotated sequential cell outputs. (PWR-415)

****************************************
Report : power
        -analysis_effort low
Design : pipeline_structural
Version: V-2023.12-SP3
Date   : Fri Feb 27 01:47:59 2026
****************************************


Library(s) Used:

    lsi_10k (File: /usr/synopsys/syn/V-2023.12-SP3/libraries/syn/lsi_10k.db)

Information: The cells in your design are not characterized for internal power. (PWR-229)

Operating Conditions: nom_pvt   Library: lsi_10k
Wire Load Model Mode: top


Global Operating Voltage = 5
Power-specific unit information :
    Voltage Units = 1V
    Capacitance Units = 0.100000ff
    Time Units = 1ns
    Dynamic Power Units = 100nW    (derived from V,C,T units)
    Leakage Power Units = Unitless


Attributes
----------
i - Including register clock pin internal power
```

```
  Cell Internal Power  =   0.0000 nW    (0%)
  Net Switching Power  =  65.0419 uW  (100%)
                         ---------
Total Dynamic Power    =  65.0419 uW  (100%)

Cell Leakage Power     =   0.0000

Error: Either dynamic power or leakage power, in the library, is unitless. Unable to display
complete power group summary. (PWR-799)

                 Internal         Switching          Leakage           Total
Power Group      Power            Power              Power             Power   (   %    )  Attrs
--------------------------------------------------------------------------------------------------
io_pad             0.0000           0.0000           0.0000             NA   (     N/A)
memory             0.0000           0.0000           0.0000             NA   (     N/A)
black_box          0.0000           0.0000           0.0000             NA   (     N/A)
clock_network      0.0000           0.0000           0.0000             NA   (     N/A)  i
register           0.0000       1.3168e+04           0.0000             NA   (     N/A)
sequential         0.0000           0.0000           0.0000             NA   (     N/A)
combinational      0.0000       5.1874e+04           0.0000             NA   (     N/A)
--------------------------------------------------------------------------------------------------
Total              0.0000 nW    6.5042e+04 nW        0.0000             NA
1
```

Pipeline RTL

```
****************************************
Report : area
Design : pipeline_rtl
Version: V-2023.12-SP3
Date   : Fri Feb 27 01:48:12 2026
****************************************

Information: Updating design information... (UID-85)
Library(s) Used:

    lsi_10k (File: /usr/synopsys/syn/V-2023.12-SP3/libraries/syn/lsi_10k.db)

Number of ports:                          589
Number of nets:                          2782
Number of cells:                         2247
Number of combinational cells:           1937
Number of sequential cells:               296
Number of macros/black boxes:               0
Number of buf/inv:                        433
Number of references:                      14
```

```
Combinational area:              2898.000000
Buf/Inv area:                    435.000000
Noncombinational area:           2108.000000
Macro/Black Box area:              0.000000
Net Interconnect area:      undefined  (No wire load specified)

Total cell area:                 5006.000000
Total area:                 undefined
1
```

```
****************************************
Report : timing
        -path full
        -delay max
        -max_paths 1
Design : pipeline_rtl
Version: V-2023.12-SP3
Date   : Fri Feb 27 01:48:12 2026
****************************************

Operating Conditions: nom_pvt   Library: lsi_10k
Wire Load Model Mode: top

  Startpoint: p3_reg[7] (rising edge-triggered flip-flop clocked by clk)
  Endpoint: p6_reg[17] (rising edge-triggered flip-flop clocked by clk)
  Path Group: clk
  Path Type: max

  Point                                          Incr       Path
  -----------------------------------------------------------------------------
  clock clk (rise edge)                          0.00       0.00
  clock network delay (ideal)                     0.00       0.00
  p3_reg[7]/CP (FD1P)                            0.00       0.00 r
  p3_reg[7]/Q (FD1P)                             1.54       1.54 f
  add_46/A[7] (pipeline_rtl_DW01_add_8)                0.00       1.54 f
  add_46/U253/Z (OR2)                            1.03       2.57 f
  add_46/U15/Z (IVP)                             0.69       3.26 r
  add_46/U252/Z (NR3P)                            0.34       3.60 f
  add_46/U251/Z (NR2P)                            0.82       4.41 r
  add_46/U249/Z (ND2P)                            0.43       4.84 f
  add_46/U206/Z (ND2)                            0.78       5.62 r
  add_46/U50/Z (AO3)                             0.50       6.12 f
  add_46/U56/Z (NR2)                             1.07       7.19 r
  add_46/U54/Z (EO)                              1.13       8.32 f
  add_46/SUM[17] (pipeline_rtl_DW01_add_8)             0.00       8.32 f
  U874/Z (AN2P)                                  0.87       9.19 f
  p6_reg[17]/D (FD1)                             0.00       9.19 f
  data arrival time                                         9.19

  clock clk (rise edge)                         10.00      10.00
  clock network delay (ideal)                     0.00      10.00
  p6_reg[17]/CP (FD1)                            0.00      10.00 r
```

```
  library setup time                          -0.80      9.20
  data required time                                     9.20
  -----------------------------------------------------------------------------
  data required time                                     9.20
  data arrival time                                     -9.19
  -----------------------------------------------------------------------------
  slack (MET)                                            0.01


1
```

```
Warning: Main library 'lsi_10k' does not specify the following unit required for power: 'Leakage
Power'. (PWR-424)
Information: Propagating switching activity (low effort zero delay simulation). (PWR-6)
Warning: Design has unannotated primary inputs. (PWR-414)
Warning: Design has unannotated sequential cell outputs. (PWR-415)

****************************************
Report : power
        -analysis_effort low
Design : pipeline_rtl
Version: V-2023.12-SP3
Date   : Fri Feb 27 01:48:38 2026
****************************************


Library(s) Used:

    lsi_10k (File: /usr/synopsys/syn/V-2023.12-SP3/libraries/syn/lsi_10k.db)

Information: The cells in your design are not characterized for internal power. (PWR-229)

Operating Conditions: nom_pvt   Library: lsi_10k
Wire Load Model Mode: top


Global Operating Voltage = 5
Power-specific unit information :
    Voltage Units = 1V
    Capacitance Units = 0.100000ff
    Time Units = 1ns
    Dynamic Power Units = 100nW    (derived from V,C,T units)
    Leakage Power Units = Unitless


Attributes
----------
i - Including register clock pin internal power


  Cell Internal Power  =   0.0000 nW    (0%)
  Net Switching Power  =  67.8657 uW  (100%)
                         ---------
```

```
Total Dynamic Power    =  67.8657 uW  (100%)

Cell Leakage Power     =   0.0000

Error: Either dynamic power or leakage power, in the library, is unitless. Unable to display
complete power group summary. (PWR-799)

                Internal        Switching          Leakage           Total
Power Group      Power           Power             Power            Power   (   %    )  Attrs
--------------------------------------------------------------------------------------------
io_pad            0.0000          0.0000           0.0000            NA   (     N/A)
memory            0.0000          0.0000           0.0000            NA   (     N/A)
black_box         0.0000          0.0000           0.0000            NA   (     N/A)
clock_network     0.0000          0.0000           0.0000            NA   (     N/A)  i
register          0.0000       1.3140e+04          0.0000            NA   (     N/A)
sequential        0.0000          0.0000           0.0000            NA   (     N/A)
combinational     0.0000       5.4726e+04          0.0000            NA   (     N/A)
--------------------------------------------------------------------------------------------
Total             0.0000 nW    6.7866e+04 nW        0.0000            NA
1
```